GatesPlus

1300 121 666

Retaining Brake 0G, 1G, 2G & 3G Anti Door Slammer

Aluminium & Stainless

The 0G, 1G, 2G and 3G range of retaining brakes are an ideal solution for all door types where the possibility of door slamming exists.

Ideal for low to extreme traffic environments, modest to extreme weather conditions, internal or external doors including light weight to very heavy doors, the 0G, 1G, 2G and 3G range of retaining brake are easily installed on all existing doors without having to dismantle the door.

Stocked by **Gatesplus** in large quantities. The Justor 0G, 1G, 2G and 3G range retaining brake have a speed regulator for detailed control of door closure speed; aesthetically pleasing to the eye, cost effective & highly functional, the only solution to consider for high wind environments.

Made of Stainless Steel, the 0G, 1G, 2G and 3G range are maintenance free, due to their unique construction, they are fully adjustable while the door is still hanging and do not require periodic greasing or recharging. The 0G, 1G, 2G and 3G range of retaining brakes silently engages in the last 10° of door swing closure. Made in Spain By Justor, the 0G, 1G, 2G or 3G retaining brake is a unique solution for an age old problem of high wind and drafts slamming doors.

Quick Facts:

- Eliminates possible door slams
- Hydraulic Mechanism
- Silent mechanism
- For Light or Heavy Doors
- Acts on the last 10° of closure
- Variable Closing Strength
- Detailed Instructions Included
- Available in Silver or Bronze
- Quick & Simple Installation without dismantling of door
- 2 Year Guarantee

Retaining Brake Range Technical Data

Aluminium & Stainless

Anatomy of a Retaining Brake:

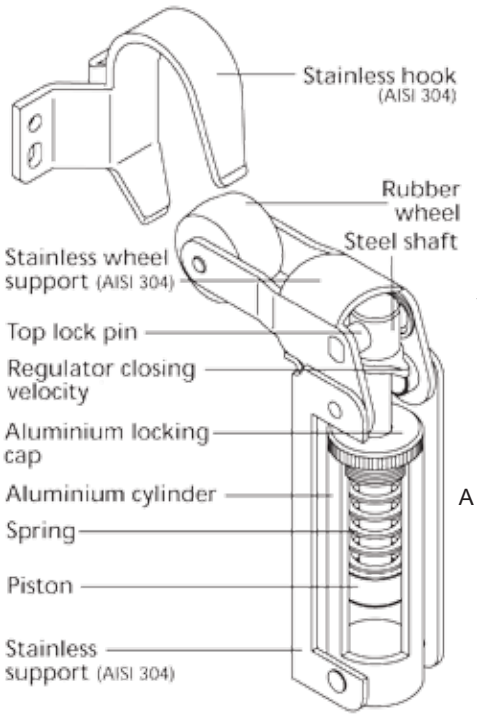

Dimensional Information:

Mod.	D/Width	D/Kg	A	B	C	D	E	F	G	H
BI0G	75cm	15	183,5	75	108,5	32	27	66,5	49	64
BI1G	90cm	40								
BI2G	110cm	80	200	75	125	36				
BI3G	125cm	115								

0G & 1G for interior and light doors
2G for doors with a lot of use
3G for heavy doors

Measurements Table (in mm)
D = Door

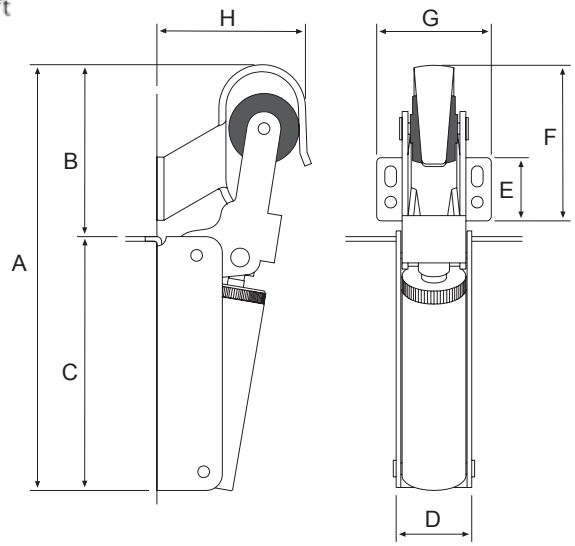

Order Codes:

- BI0GS - Silver
- BI0GB - Bronze (by Request)
- BI1GS - Silver
- BI1GB - Bronze (by Request)
- BI2GS - Silver
- BI2GB - Bronze (by Request)
- BI3GS - Silver
- BI3GB - Bronze (by Request)
- All models available in 304 grade Stainless Steel (by request)