WIRELESS KEY-PAD Model: ACT-321

INSTALLATION

1. Remove the front panel of the keypad by inserting a small flat screw driver at the bottom of the keypad.

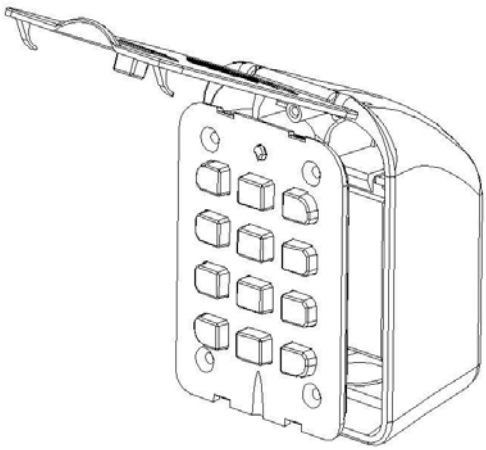

2. Use a flat screwdriver to remove out the keypad panel.

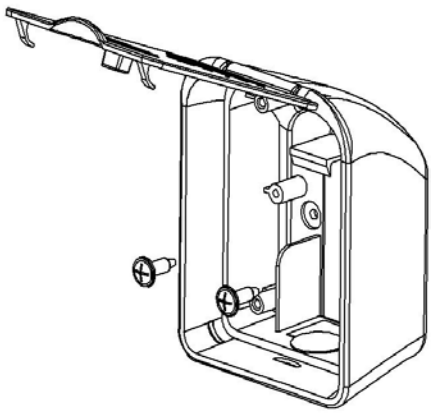

3. Attached the rear casing of the keypad to the wall by using the two screws and the **rubber "O" rings** in the kit.

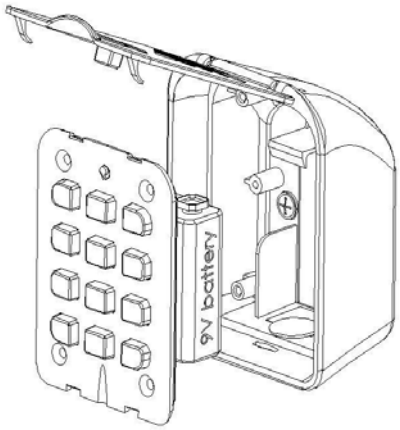

4. Connect the 9V battery and return the keypad-panel carefully into its place.

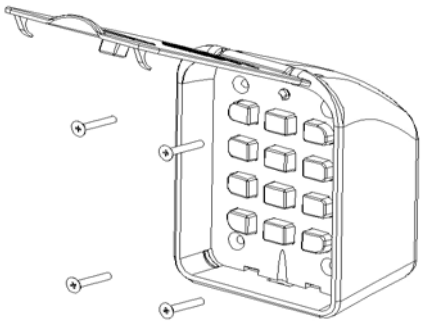

5. Use the four screws in the kit and close the front panel. Do not tighten the screws to much..

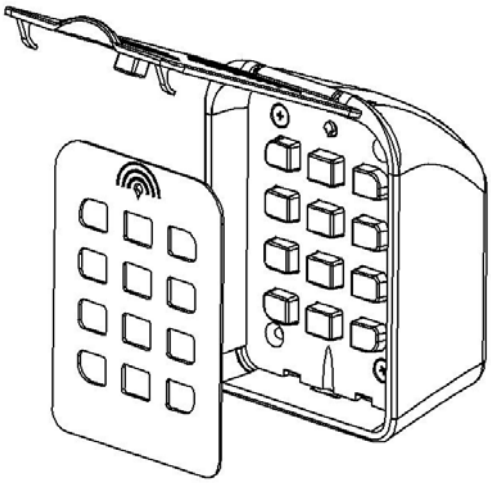

6. Return the front cover panel to its place by pushing it in with your fingers.

Programming and setting the keypad

ENTERING PROGRAMMING MODE

To enter PROGRAM MODE, key in the **installer's pin code** (4 digits) followed by the (*) key.
Note! The factory default installer's pin code number is 9 9 9 9.

[9] + [9] + [9] + [9] + [*] => A long Beep will follow to confirm.

Note !
The keypad will exit programming mode automatically after 7 seconds if no further commands are received.
You can change the installer's pin-code to one of your own – see details below.

HOW TO PROGRAM EACH CHANNEL'S PIN-CODE

The keypad has six different channels, and each channel can operate a different receiver.
You can choose and program for each of the 6 channels a different PIN CODE as follows:

1. **ENTER PROGRAM MODE.**
2. **Enter the channel's number (1 – 6) you would like to program followed by the hash key (#).**
3. **Enter the 4 digits pin-code you choose for this channel, followed by the hash key (#).**
   The system will confirm by a long Beep and exit program mode automatically.

Example for programming channel's ***ONE*** *pin-code to be* ***2 0 5 0***

Entering program mode: [9] + [9] + [9] + [9] + [*] => *A long Beep will confirm.*

Entering the channel's number: [1] + [#] => *A long Beep to confirm.*

Entering the channel's pin code [2] + [0] + [5] + [0] + [#] => *A long Beep to confirm.*

The factory's default Pin-Code for each channel:

No	CHANNEL	Default PIN CODE
1	I	**1 2 3 4**
2	II	**5 6 7 8**
3	III	**9 0 1 2**
4	IV	**3 4 5 6**
5	V	**7 8 9 0**
6	VI	**9 8 7 6**

NOTE ! IMPORTANT INFORMATION
Channel four is reserved to be used and operate all ECA brand control panels for gates, **as a pedestrian mode only**, the same as button **(IV)** in the remote control TR-4RS.
i.e. Channel Four will open / close only one of the gates of the swing gates or open the sliding gate for 1m' only, for pedestrian access.

HOW TO CHANGE INSTALLER'S PIN-CODE

For security reasons, you can change the installer's pin-code number to be one of your own, so that only you (and no other installers) will be able to change and program the keypad in the future.
For programming a new installer's pin-code number do as follows:

1. Enter programming mode.
2. Press (**9**) + (#) for changing installer's pin-code.
3. Enter the new installer's pin-code (four digits) followed by the (#) key.
4. A Long Beep will follow to confirm.

HOW TO OPERATE & TEACH THE KEYPAD INTO THE RECEIVER

Teach one of the channels of the keypad into the receiver or control panel, in the same way you teach a remote control. i.e., the keypad will transmit one out of the six channels' code, each time a valid 4-Digit Pin Code has been keyed in. Simply key-in the right four digit pin-code of the channel you would like to operate the receiver and the keypad will transmit to the receiver you have chosen to teach-in.
The Keypad will confirm a VALID pin-code by one **Long Beep** and transmit the code of the channel required. Two Short Beeps will indicate wrong command.

SCRAMBLED PIN CODE

In case you are accompanied by people who might see the pin-code while you key it in, you can scramble your pin-code while you key it in, to prevent from your visitors to see your pin-code.

To key-in a scrambled pin-code, you simply press any of the digits (0 - 9) in the keypad (except the * and the # keys) as many time as you wish and during this process, press the **right four digit pin-code** followed by more scrambled digits and then the (#) key. The keypad will automatically disregard all the scrambled non valid digits you have keyed-in and operate the right channel after the (#) is pressed.

HOW TO SET THE KEYPAD TO OPORATE AS A PUSH BUTTON

The keypad's top cover can be used as a *TOUCH PAD of a* wireless push button to activate one out of the six channels of the keypad. To select and choose the required channel to operate as a push button do as follows:

- Press the (*) followed by the 4 digit pin-code number of the channel you would like to operate as a push button. A long beep will confirm this setup.
- To cancel the push button setup, press the (#) followed by the (*)

Example for programming channel ***ONE*** *which has a pin-code of* ***2 0 5 0*** *to operate as a push button:*

Press: [*] + [2] + [0] + [5] + [0] => *A long Beep will confirm.*

To cancel: [#] + [*] => *A long Beep to confirm.*

Note! In Push Button Mode, the other five channels will continue to function through the keypad.

HOW TO TURN OFF / ON THE BUZZER OF THE KEYPAD

Each press on the keypad's buttons is confirmed by a *BEEP* sound. However, you can cancel the buzzer and set the keypad into ***silent mode*** as follows:

1. **ENTER PROGRAMMING MODE.**
2. **Press (8) followed by the hash key (#).**
3. **The system is now in silent mode.**
4. **To restore, repeat steps 1 & 2 above.**

Example:

- ⇨ (9 9 9 9 + * + **8** + #) => Long Beep => the unit will enter Silent Mode.
- ⇨ (9 9 9 9 + * + **8** + #) => Long Beep => the unit will enter Audible Mode.

Note! In Silent Mode, the buzzer will sound in programming mode only.

HOW TO TURN OFF / ON THE BACK LIGHT OF THE KEYPAD

To prolong the lifetime of the battery in the keypad, it is recommended to cancel the back light in the keypad. To cancel the back light do as follows:

1. **ENTER PROGRAMMING MODE.**
2. **Press (1 0) followed by the hash key (#).**
3. **The back light now is off .**
4. **To restore, repeat steps 1 & 2 above.**

Example:

⇨ (9 9 9 9 + * + **1 0** + #) => Long Beep => Back light is OFF.
⇨ (9 9 9 9 + * + **1 0** + #) => Long Beep => Back light is ON.

HOW TO CHECK TO WHITCH CHANNALE BELONGS A PIN CODE

You can found to which channel belongs a certain pin code as follows:

1. **ENTER PROGRAMMING MODE.**
2. **Press (1 1) followed by the hash key (#).**
3. **Enter the pin code of the required channel you want to check.**
4. **The keypad will indicate the channel's number by number of long " BEEP" sounds.**

Example:

⇨ (9 9 9 9 + * + **11** + # + 4 digit pin code) => count the number of "Beeps" that indicate the channel's number. Six beeps indicate

Features of Operation

1. Battery Low, the voltage of the battery must be tested during the 1.5sec code transmission. If the battery is low (less than 80%) the unit will indicated that by two short and long beeps after the transmission of code is made.

2. **Battery Test.**
   The voltage level of the battery can be tested as follows: * + * + # + #
   Long beep = > Battery O.K.
   Short beep = > Battery Low.

3. **Security Lock,**
   The key pad will allow three attempts of wrong entries of codes and then will lock for five minutes.